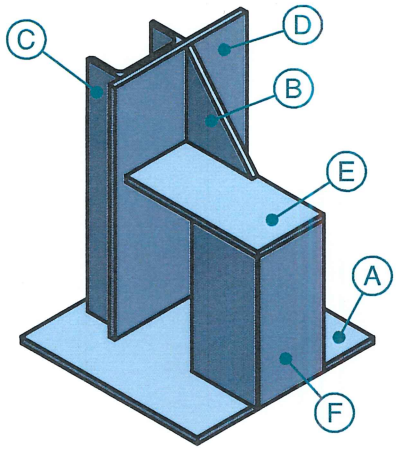

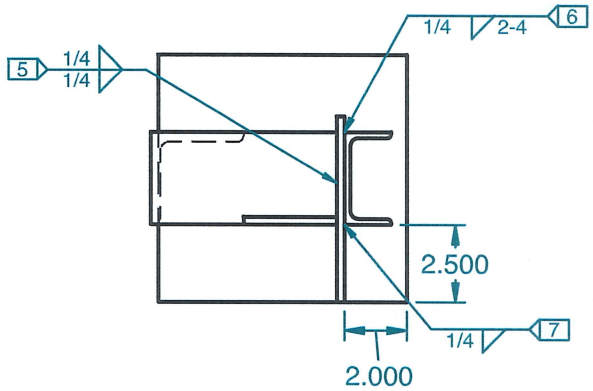

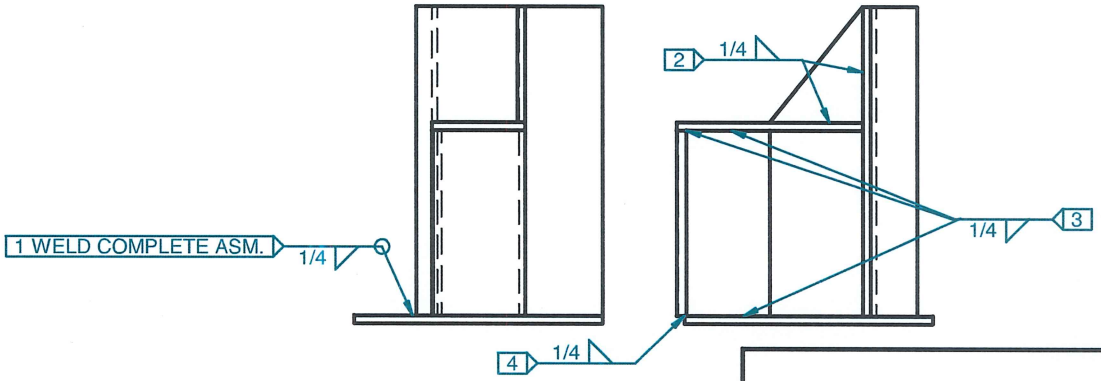

ID	Qty	Title
A	1	0.25 X 8 X 8 Steel Plate
B	1	1/4 x 3 x 3.75 Plate
C	1	3 x 5.0# x 10 Steel Channel
D	1	0.25 x 6 x 10 Steel Plate
E	1	1/4 x 3 x 6 Plate
F	1	5/16 x 3 x 3 x 6 Steel Angle

ALL PROCESSES TO BE COMPLETED WITH THE MATERIALS PROVIDED

1. WELD IN ACCORDANCE WITH WPS# 108
2. TACK COMPLETE ASSEMBLY IN ANY POSITION
3.WELDING TO BE COMPLETED WITH PLATE A FLAT TO THE TABLE
4. ALL VERTICAL WELDS TO BE UPHILL

SkillsUSA

UNLESS OTHERWISE SPECIFIED
DIMENSIONS ARE IN INCHES

TITLE FCAW

SIZE A

SHEET 1 OF 1

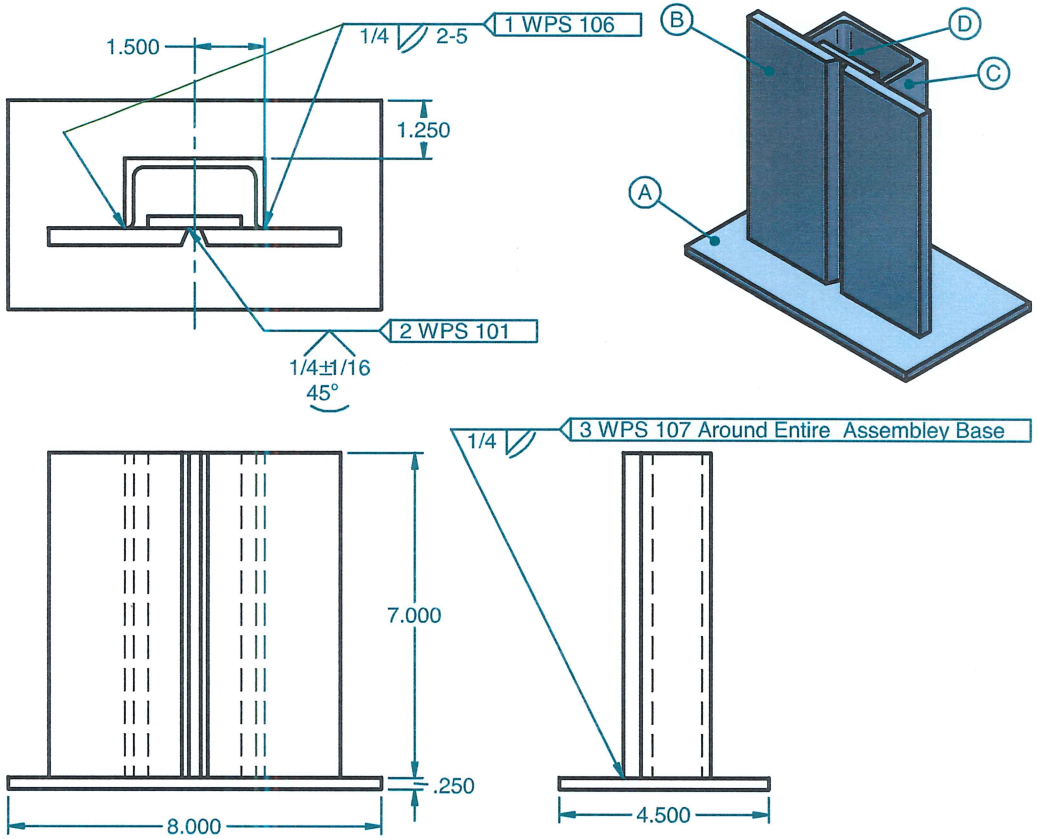

ID	Qty.	Desc.
A	1	0.25 X 4.5 X 8 Steel Plate
B	2	3/8 x 7 x 3 22.5 Bevel One End
C	1	3 x 5.0# x 7 Steel Channel
D	1	0.25 x 2 x 7 Steel Plate

ALL PROCESSES TO BE COMPLETED WITH THE MATERIALS PROVIDED

1. TACK COMPLETE ASSEMBLY IN ANY POSITION

2.WELDING TO BE COMPLETED WITH THE GROOVE WELD IN THE 3G POSITION WITH PLATE A ON THE TABLE

SkillsUSA

UNLESS OTHERWISE SPECIFIED
DIMENSIONS ARE IN INCHES

TITLE
SMAW

SIZE
A

SHEET 1 OF 1

SkillsUSA

Welding Procedure Specification

WPS 101

WPS No. **WPS 101** Revision **4** Date **4/21/2013** By **NP**

Authorized By **EN** Date **6/22/2017** Prequalified ☐

Welding Process(es) **SMAW** Type: Manual ■ Machine ☐ Semi-Auto ☐ Auto ☐

Supporting PQR(s)

JOINT

Type **Butt / T-Joint**

Backing Yes ■ No ☐ Single Weld ■ Double Weld ☐

Backing Material **A-36**

Root Opening **Per Drawing** Root Face Dimension **Per Drawing**

Groove Angle **Per Drawing** Radius (J-U) **Per Drawing**

Back Gouge Yes ☐ No ■

Method **N/A**

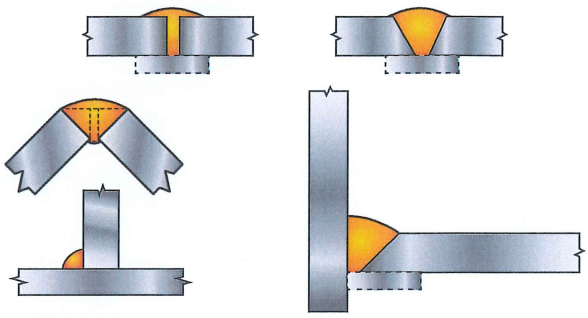

BASE METALS

Material Spec. **A-36** to **A-36**

Type or Grade to

Thickness: Groove (in) **1/8in.** - **Unlimited**

Fillet ( ) **Unlimited** - **Unlimited**

Diameter (Pipe, in) **4in.** - **Unlimited**

FILLER METALS

AWS Specification **A5.1**

AWS Classification **E-7018**

SHIELDING

Flux **N/A**

Electrode-Flux (Class) **N/A**

Gas **N/A**

Composition **N/A**

Flow Rate **N/A**

Gas Cup Size **N/A**

PREHEAT

Preheat Temp., Min. **60 Deg.F**

Thickness Up to 3/4" Temperature **N/A**

Over 3/4" to 1-1/2" **N/A**

Over 1-1/2" to 2-1/2" **N/A**

Over 2-1/2" **N/A**

Interpass Temp., Min. **N/A** Max. **N/A**

POSITION

Position of Groove **Any** Fillet **Any**

Vertical Progression: ■ Up ☐ Down

ELECTRICAL CHARACTERISTICS

Transfer Mode (GMAW):

Short-Circuiting ☐ Globular ☐ Spray ☐

Current: AC ☐ DCEP ■ DCEN ☐ Pulsed ☐

Other **N/A**

Tungsten Electrode (GTAW):

Size **N/A** Type **N/A**

TECHNIQUE

Stringer or Weave Bead **Both**

Multi-pass or Single Pass (per side) **Single / Multiple**

Number of Electrodes **1**

Electrode Spacing: Longitudinal **N/A**

Lateral **N/A**

Angle **N/A**

Contact Tube to Work Distance **N/A**

Peening **N/A**

Interpass Cleaning **Chip slag and wire brush**

POSTWELD HEAT TREATMENT

PWHT Required ☐

Temp. **N/A** Time **N/A**

WELDING PROCEDURE

Layer/Pass	Process	Filler Metal Class	Diameter	Cur. Type	Amps	Volts	Travel Speed	Other Notes
All	SMAW	E-7018	3/32	DCEP	70-110	N/A	4-10 ipm	
			OR					
All	SMAW	E-7018	1/8	DCEP	90-150	N/A	4-10 ipm	

SkillsUSA

Welding Procedure Specification

WPS 106

WPS No. **WPS 106** Revision **3** Date **4/20/2012** By **NP**

Authorized By **EN** Date **6/22/2017** Prequalified ☐

Welding Process(es) **SMAW** Type: Manual ■ Machine ☐ Semi-Auto ☐ Auto ☐

Supporting PQR(s)

JOINT

Type **T-Joint**

Backing Yes ☐ No ■ Single Weld ■ Double Weld ☐

Backing Material **N/A**

Root Opening **Per Drawing** Root Face Dimension **Per Drawing**

Groove Angle **Per Drawing** Radius (J-U) **Per Drawing**

Back Gouge Yes ☐ No ■

Method **N/A**

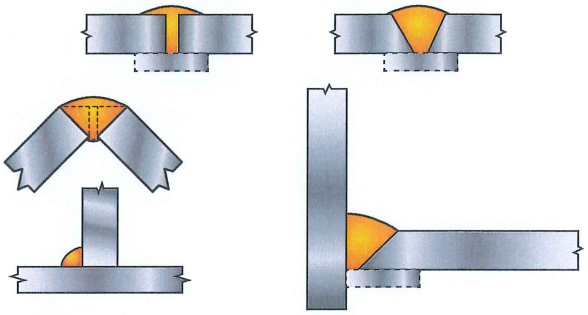

BASE METALS

Material Spec. **A-36** to **A-36**

Type or Grade to

Thickness: Groove (in) **1/8in.** - **Unlimited**

Fillet ( ) **Unlimited** - **Unlimited**

Diameter (Pipe, in) **4in.** - **Unlimited**

POSITION

Position of Groove **Any** Fillet **Any**

Vertical Progression: ■ Up ☐ Down

FILLER METALS

AWS Specification **A5.1**

AWS Classification **E-6010**

ELECTRICAL CHARACTERISTICS

Transfer Mode (GMAW):

Short-Circuiting ☐ Globular ☐ Spray ☐

Current: AC ☐ DCEP ■ DCEN ☐ Pulsed ☐

Other **N/A**

Tungsten Electrode (GTAW):

Size **N/A** Type **N/A**

SHIELDING

Flux **N/A**

Electrode-Flux (Class) **N/A**

Gas **N/A**

Composition **N/A**

Flow Rate **N/A**

Gas Cup Size **N/A**

TECHNIQUE

Stringer or Weave Bead **Both**

Multi-pass or Single Pass (per side) **Multiple/Single**

Number of Electrodes **1**

Electrode Spacing: Longitudinal **N/A**

Lateral **N/A**

Angle **N/A**

Contact Tube to Work Distance **N/A**

Peening **N/A**

Interpass Cleaning **Chip slag and wire brush**

PREHEAT

Preheat Temp., Min. **60 Deg.F**

Thickness Up to 3/4" Temperature **N/A**

Over 3/4" to 1-1/2" **N/A**

Over 1-1/2" to 2-1/2" **N/A**

Over 2-1/2" **N/A**

Interpass Temp., Min. **N/A** Max. **N/A**

POSTWELD HEAT TREATMENT

PWHT Required ☐

Temp. **N/A** Time **N/A**

WELDING PROCEDURE

Layer/Pass	Process	Filler Metal Class	Diameter	Cur. Type	Amps	Volts	Travel Speed	Other Notes
All	SMAW	E-6010	1/8	DCEP	75-135	N/A	4-10 ipm	

SkillsUSA

Welding Procedure Specification

WPS 107

WPS No. **WPS 107** Revision **3** Date **4/20/2012** By **NP**

Authorized By **EN** Date **6/22/2017** Prequalified ☐

Welding Process(es) **SMAW** Type: Manual ■ Machine ☐ Semi-Auto ☐ Auto ☐

Supporting PQR(s)

JOINT

Type **T-Joint**

Backing Yes ☐ No ■ Single Weld ■ Double Weld ☐

Backing Material **N/A**

Root Opening **Per Drawing** Root Face Dimension **Per Drawing**

Groove Angle **Per Drawing** Radius (J-U) **Per Drawing**

Back Gouge Yes ☐ No ■

Method **N/A**

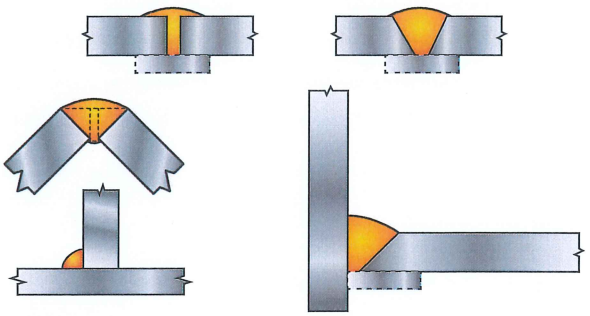

BASE METALS

Material Spec. **A-36** to **A-36**

Type or Grade to

Thickness: Groove ( ) **1/8in.** - **Unlimited**

Fillet ( ) **Unlimited** - **Unlimited**

Diameter (Pipe, in) **4in.** - **Unlimited**

POSITION

Position of Groove **1G** Fillet **1F,2F (Plate)**

Vertical Progression: ☐ Up ☐ Down

FILLER METALS

AWS Specification **A5.1**

AWS Classification **E-7024**

ELECTRICAL CHARACTERISTICS

Transfer Mode (GMAW):

Short-Circuiting ☐ Globular ☐ Spray ☐

Current: AC ☐ DCEP ■ DCEN ☐ Pulsed ☐

Other **N/A**

Tungsten Electrode (GTAW):

Size **N/A** Type **N/A**

SHIELDING

Flux **N/A**

Electrode-Flux (Class) **N/A**

Gas **N/A**

Composition **N/A**

Flow Rate **N/A**

Gas Cup Size **N/A**

TECHNIQUE

Stringer or Weave Bead **Both**

Multi-pass or Single Pass (per side) **Multiple/Single**

Number of Electrodes **1**

Electrode Spacing: Longitudinal **N/A**

Lateral **N/A**

Angle **N/A**

Contact Tube to Work Distance **N/A**

Peening **N/A**

Interpass Cleaning **Chip slag and wire brush**

PREHEAT

Preheat Temp., Min. **60 Deg.F**

Thickness	Temperature
Up to 3/4"	N/A
Over 3/4" to 1-1/2"	N/A
Over 1-1/2" to 2-1/2"	N/A
Over 2-1/2"	N/A

Interpass Temp., Min. **N/A** Max. **N/A**

POSTWELD HEAT TREATMENT

PWHT Required ☐

Temp. **N/A** Time **N/A**

WELDING PROCEDURE

Layer/Pass	Process	Filler Metal Class	Diameter	Cur. Type	Amps	Volts	Travel Speed	Other Notes
All	SMAW	E-7024	1/8	DCEP	130-150	N/A	4-10 ipm	

SkillsUSA

Welding Procedure Specification

WPS 108

WPS No. **WPS 108** Revision **2** Date **4/19/2016** By **NP**

Authorized By **EN** Date **6/22/2017** Prequalified ☐

Welding Process(es) **FCAW-G** Type: Manual ☐ Machine ☐ Semi-Auto ■ Auto ☐

Supporting PQR(s)

JOINT

Type **T-Joint, Butt, Flanged**

Backing Yes ☐ No ■ Single Weld ■ Double Weld ■

Backing Material **N/A**

Root Opening **Per Drawing** Root Face Dimension **Per Drawing**

Groove Angle **Per Drawing** Radius (J-U) **Per Drawing**

Back Gouge Yes ☐ No ■

Method **N/A**

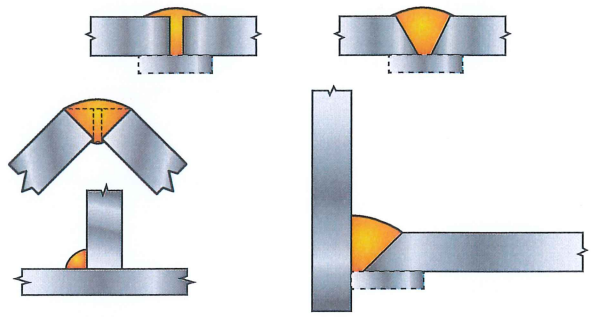

BASE METALS

Material Spec. **A-36** to **A-36**

Type or Grade to

Thickness: Groove ( ) **1/8in.** - **Unlimited**

Fillet (in) **Unlimited** - **Unlimited**

Diameter (Pipe,) **4in.** - **Unlimited**

FILLER METALS

AWS Specification **A5.20**

AWS Classification **E71T-1**

SHIELDING

Flux **N/A**

Electrode-Flux (Class) **N/A**

Gas

Composition **75%Argon/25%CO2**

Flow Rate **35-45 CFH**

Gas Cup Size **1/2" - 3/4"**

PREHEAT

Preheat Temp., Min. **60 Deg.F**

Thickness Up to 3/4" Temperature **N/A**

Over 3/4" to 1-1/2" **N/A**

Over 1-1/2" to 2-1/2" **N/A**

Over 2-1/2" **N/A**

Interpass Temp., Min. **N/A** Max. **N/A**

POSITION

Position of Groove **Any** Fillet **Any**

Vertical Progression: ■ Up ☐ Down

ELECTRICAL CHARACTERISTICS

Transfer Mode (GMAW):

Short-Circuiting ☐ Globular ☐ Spray ☐

Current: AC ☐ DCEP ■ DCEN ☐ Pulsed ☐

Other **N/A**

Tungsten Electrode (GTAW):

Size **N/A** Type **N/A**

TECHNIQUE

Stringer or Weave Bead **Both**

Multi-pass or Single Pass (per side) **Multiple/Single**

Number of Electrodes **1**

Electrode Spacing: Longitudinal **N/A**

Lateral **N/A**

Angle **N/A**

Contact Tube to Work Distance **1/2" to 3/4"**

Peening **N/A**

Interpass Cleaning **Chip slag and wire brush**

POSTWELD HEAT TREATMENT

PWHT Required ☐

Temp. **N/A** Time **N/A**

WELDING PROCEDURE

Layer/Pass	Process	Filler Metal Class	Diameter	Cur. Type	Amps	Volts	Travel Speed	Other Notes
All	FCAW-G	E71T-1M	0.045	DCEP	125-190	21-27	5-12	WFS:175-400 ipm